Hot&Cold Fresh Milk
Dual Brewing System
Your Fresh Milk Coffee Master

FRESH MILK

JL35 SERIES

Jetinno Full Automatic Coffee Machine

Enjoy Your Bean Go Time

Jetinno Chief Expert Counselor

JORIS HENDRIKS

Owner of 5 invention patents
Founder of Hendriks Coffee
High-end coffee machine designer
7 years in Spengler as product manager and corporate partner
15 years in Maas International as product designer and R&D manager

CONTENTS

- Product Highlights
- Product Features
- Core Components
- Product Parameters
- Product Size
- Optional Parts
- Customization Details
- Clean Products
- Product Certificates
- Our Services

Professional Dual Brew

Double-equipped

Built with 2 grinders and 2 brewers, optional with 14g/20g esspreso brewers and filter brewer, able to serve with more coffee recipes.

Smart Fresh Milk Frother

Smart frothing control to make dense and silky hot/cold milk foam.

Modular Design

Diversity of configurations are available bychoosing different brewing modules and instant modules.

Dual Brew Professional Coffee Quality

Hot/Cold Milk Foaming

Separate hot water outlet

Separate Steam Wand

One click two cups

Automatic cleaning

ES Extraction

Pre-infusion

Commercial constant 9Bar

Constant 92°C

Touch Screen

Fast Production

Exceptional Quality Derives from Profession

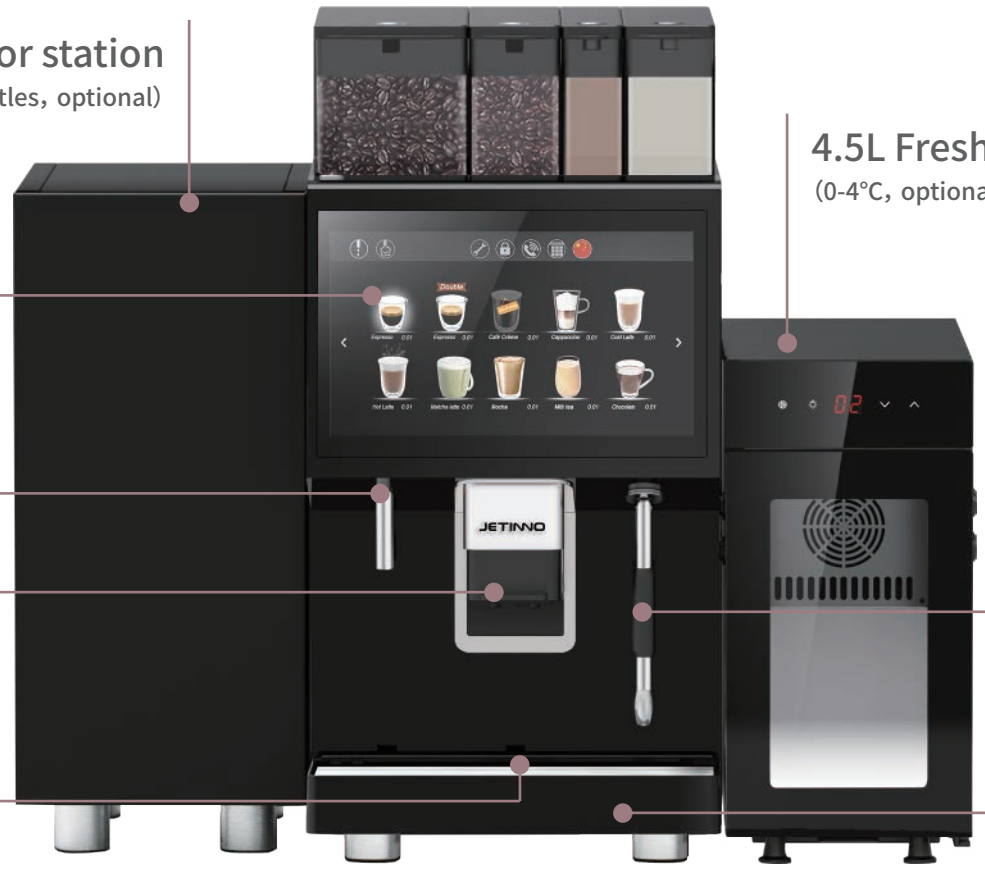

Syrup Flavor station
(6 bottles, optional)

4.5L Fresh Milk Cooler
(0-4°C, optional)

14" Touch Screen

Separate hot water outlet

Adjustable spout
(range:80-115mm)

Separate Steam Wand

cup sensor

Drip tray
(1L, water full detection)

Exceptional Quality Derives from Profession

1 x 1.8kg Bean Hopper

1 x 1.0kg Bean Hopper

2xDitting EMH64 Grinder

1xES Brewer
(14g/20g for option)

*Patent no:2018104114067

1x14g Jetinno Filter Brewer
(6g-14g tea)

*Patent no:201420471837X

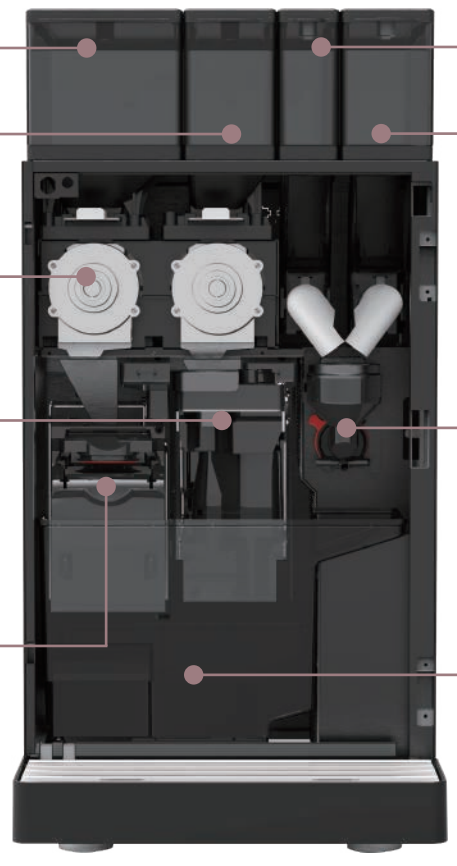

1x2.3L Instant container

1x3.5L Instant container

*Patent no:201820398027.4

1xMixer

1x Waste Bucket
(80 cakes)

A Variety of Coffee and Drinks

Dual grinding and brewing system, together with different brewers options, JL35 offers more coffee/tea choices. Added with instant and syrup, It is able to make quite a variety of drinks.

Fresh Milk System

With freshmilksystem JL35 caneasilyproducedelicate andsmoothcold /hotmilkfoam. Thehumidityand temperatureofthemilkfoamcanbe adjusted to theneed of freshmilkbeverage.

Double Boilers

Besides double grinders and brewers, JL35 has 2 boilers, hot water boiler and steam boiler. The steam boiler and steam wand improve t he art and taste of coffee.

Extended with Syrup Module

Enrich the beverages with more flavors Standardize the sweetness of drinks.

Details Make Professional

One Click, two cups

Serve with 2 cups of coffee at the same time.

Adjustable Spout

The height rangs 80-180mm, adjustable to different cups.

Hot Water& Steam Wand

Care more for cup warming and coffee art maker.

Visible Hopper and Canister

See the bean and enjoy the coffee ground and brewed.

Exceptional Quality Derives from Profession

Start-up Cleaning

The machine will automatically make full machine cleaning every time it is powered on.

Timed Cleaning

schedule a time and the machine will conduct an auto full-machine cleaning.

Milk System Cleaning

schedule a time and the milk system is able to have auto cleaning, removing the milk dregs and residue.

Partial Cleaning

choose to separately clean key modules.

Deep Cleaning

use exclusive cleaners to deeply clean coffee and milk residue.

Manual Cleaning

Manually remove the module or parts and deeply clean by hand.

Jetinno SaaS Management

Support PC and mobile

Remote Control

Support remote control of recipes adjustment, machine setting, UI ads and video upload, machine system upgrade.

Malfunction Alert

Real time machine malfunction alert, can push notice to machine operator.

Comprehensive Data

Location deployment data, drink sale data, payment data, all these data statistics help operator better in machine operation and coffee vending business.

Powerful Machine Console Platform

- Drink Promo Tag Setting
- Drink Sale Report
- Ads Management
- Stock Management
- Drink Data Bank

Modular Design

The combination of modules has been fully considered in the design stage, and the beverage production modules such as coffee extraction module and instant module are flexibly combined into one machine to facilitate customers to put into different scenarios to meet user beverage needs.

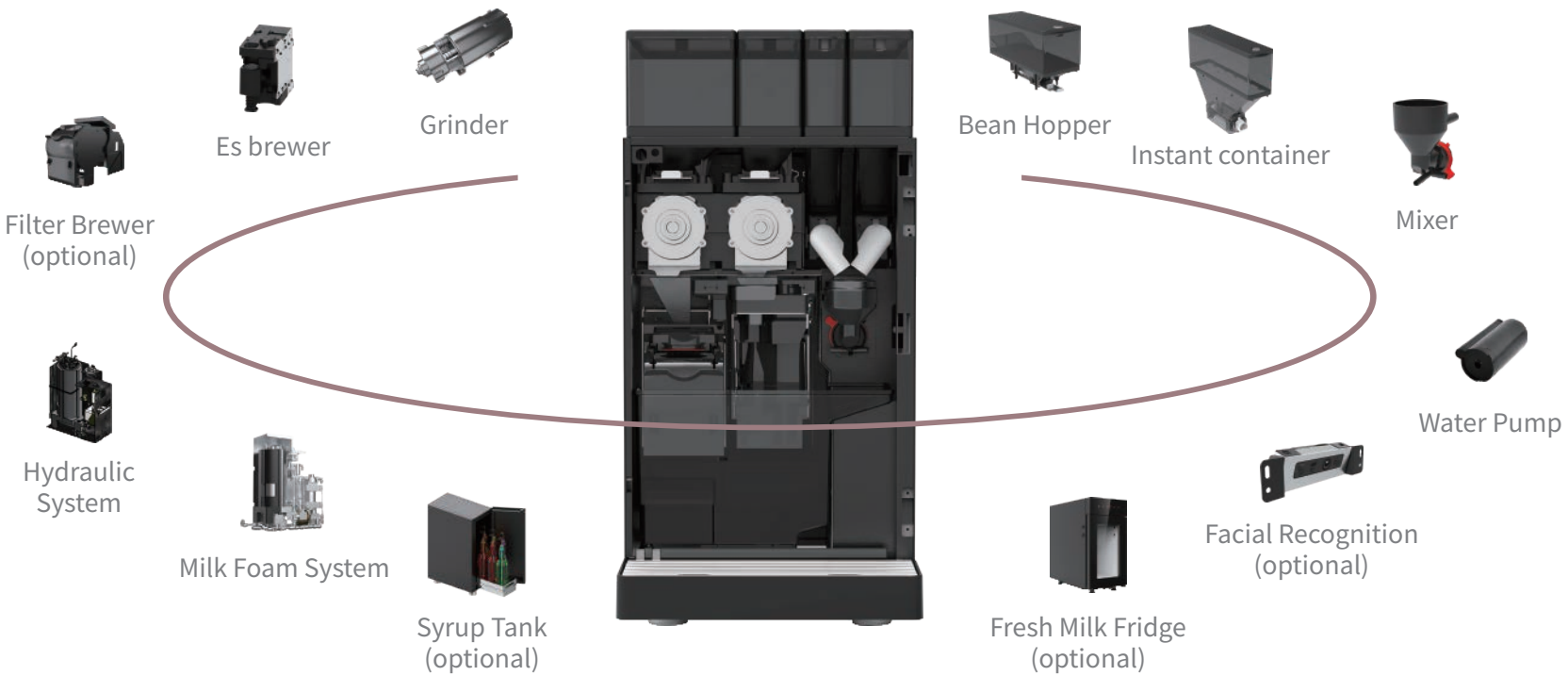

Jetinno Patented Hydraulic System

- 2700W heating power, continuous and stable water temperature guaranteed.
- Sweden Backerths 700ml stainless high-pressure boiler, max 25bar tolerance.
- USA EMERSON professional STB temperature control protective switch.
- Japan OMRON temperature/pressure sensor, real-time monitoring.
- Italy ULKA high -pressure electromagnetic pump, provides 9Bar extraction pressure.
- Other valve joints spare parts, flow meter are all Italy and German made.

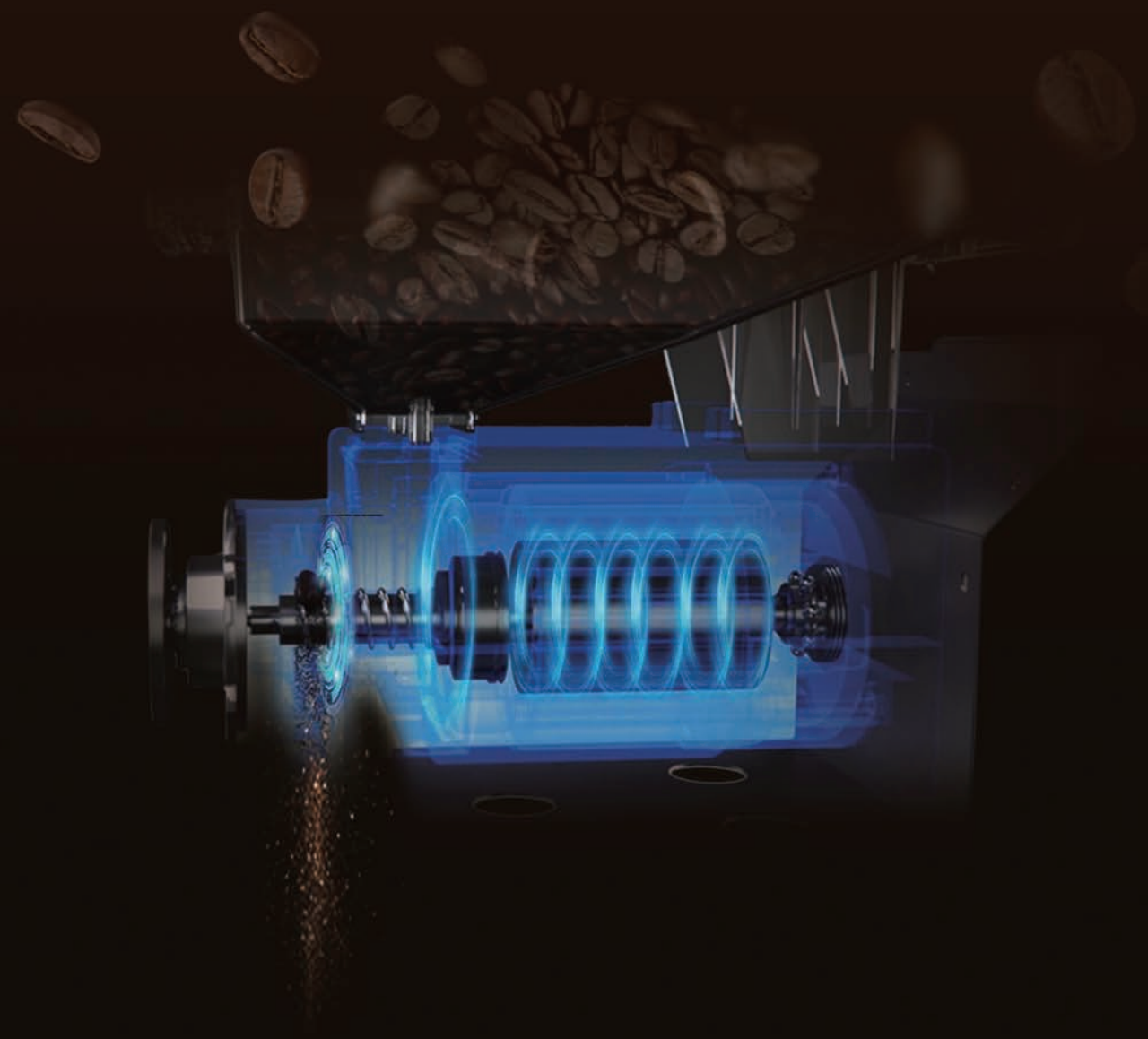

Ditting EMH64 Grinder

- 64mm flat bur, made of stainless steel.
- Low grinding heat, no interference to coffee flavor.
- Multiple adjusting grades of grinding fineness.
- 125,000 times lifespan, long service life.

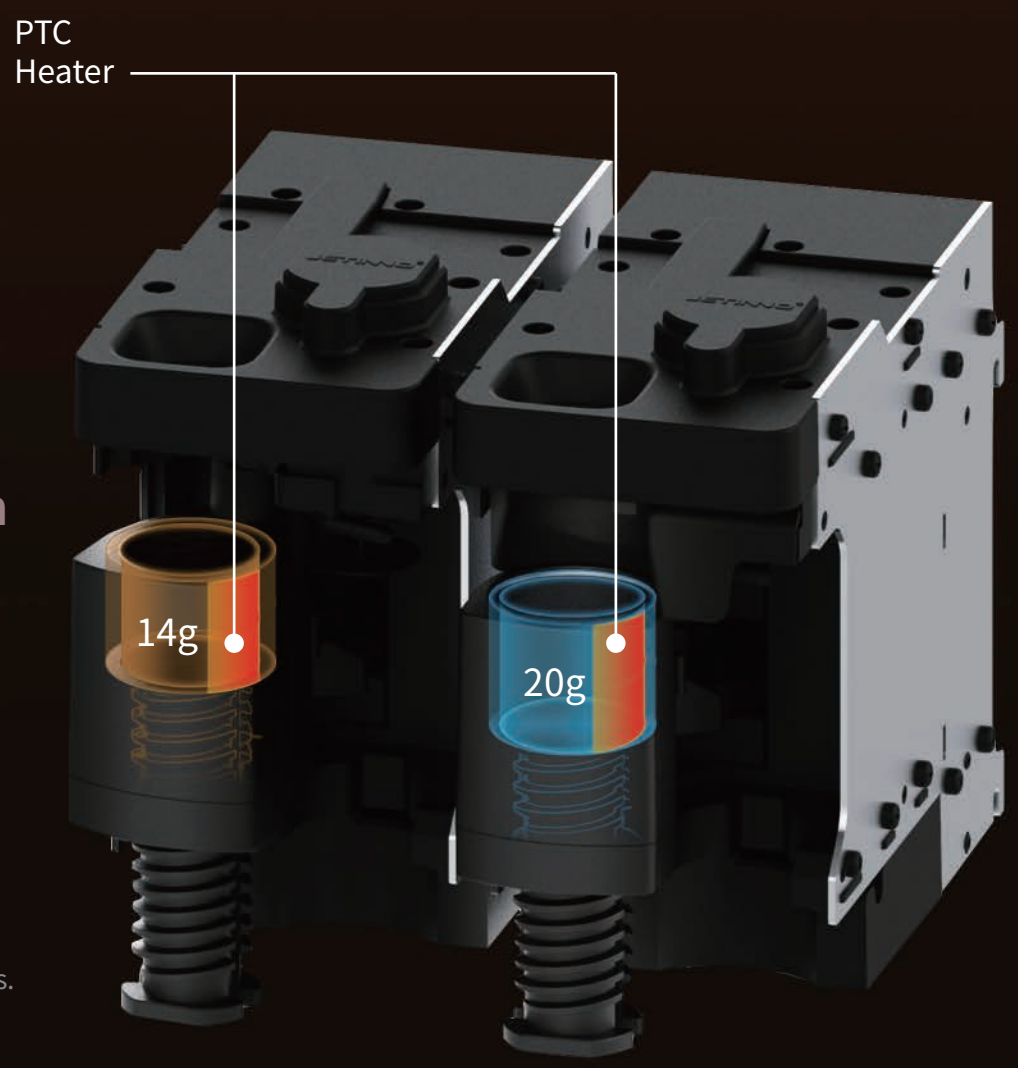

Professional coffee brewing system

- Removable brewer module design, easy for cleaning.
- 9bar 92°C Espresso extraction, compatible with low-pressure brewing.
- Jetinno PTC international patent, European time-honored brand applies the same type.
- Pre-infusion function to have saturated extraction.
- PTC heaters in brewing chambers, provide constant heating to solve low-temp of first cup.
- Built with 14g and 20g two brewing chambers, for different recipes.
- Detachable brewing chamber design, easy for deep-cleaning.
- Auto decompression function to discharge residual coffee liquid.

Filter Brewer(for coffee & tea)

- Jetinno patent.
- Spraying and pre-infusion, better extraction.
- Adjustable brewing time, water temperature and water dose.
- Detachable components design, convenience of cleaning.
- Direct coffee powder dropping, no secondary pollution.
- Maximum 14g coffee or tea powder loading.
- Can be used both as coffee and tea brewer.

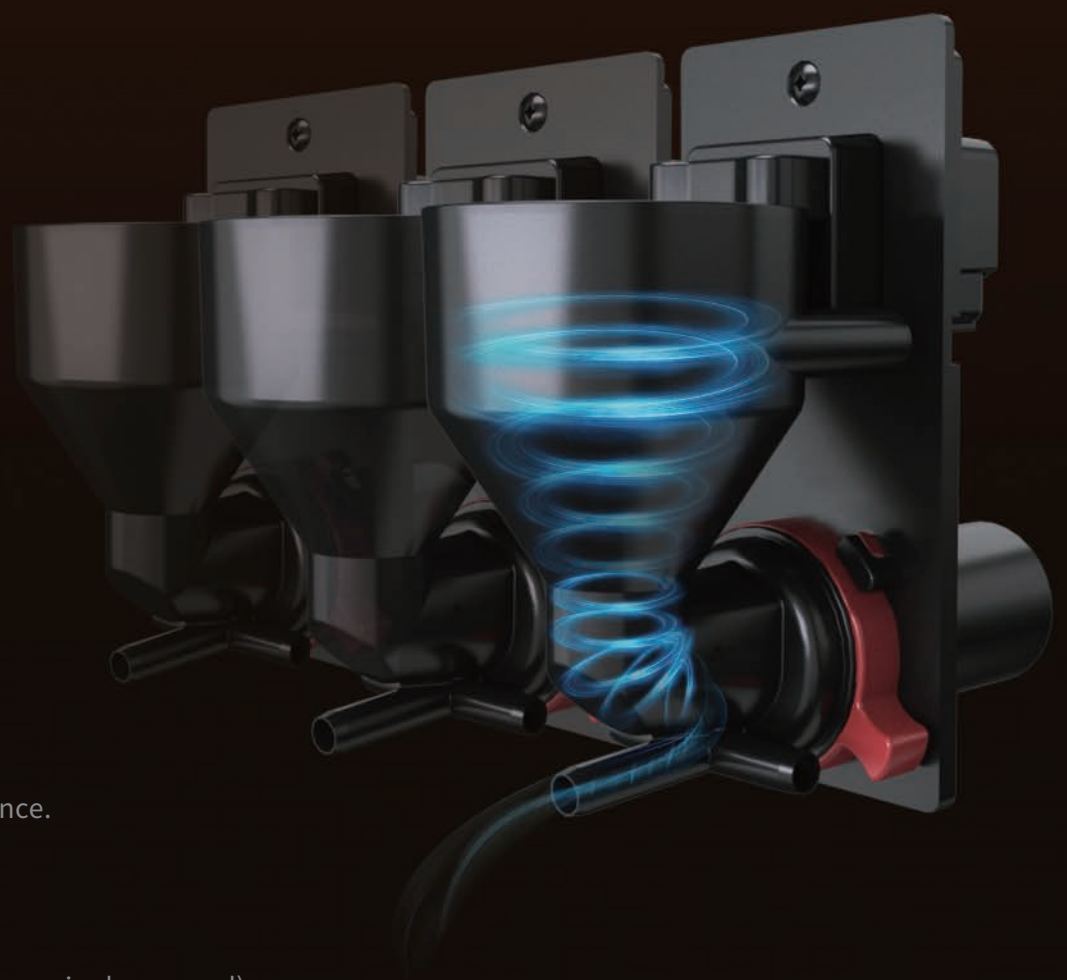

High speed stirring system

- Patented tech innovated by Jetinno.
- Detachable stirring chamber, easy for cleaning and maintenance.
- Up to 20000rpm stirring speed, rapid sufficient dissolution.
- Adjustable stirring speed for different recipes.
  (milk foam requires high speed, instant coffee and tea drinks require low speed).

Jetinno Smart Milk Foam System

- Provide hot/cold Milk and hot/cold milk foam.
- Fluid-o-tech milk pump, makes dense and silky foam.
- Smart detection, milk tank empty alert.
- humidity and temperature settings for each drink.
- milk system auto cleaning.
- separate and detachable fresh milk module.

Multi-function main board

- Designed and developed by Jetinno.
- 8 core Cortex A7 CPU, 2GHz.
- Multiple network ports for network connection.
- Multiple displaying format ports and dual screen displaying.
- Up to 10-way ports expansion.
- Android & Linux.

IO board

- Designed and developed by Jetinno.
- Quick response.
- Fast protection for malfunctioned unit.
- Precisely control all module units.
- Multiple ports expansion, can independently support 25-way control unit.
- Support various types of sensors, including temperature, humidity, flow and pressure.

Switzerland Ditting Grinder

Italy Fluid-o-tech Pump

Sweden Backerhts boiler

German AVS Römer joints

Italy ODE valve bank

USA EMERSON switch

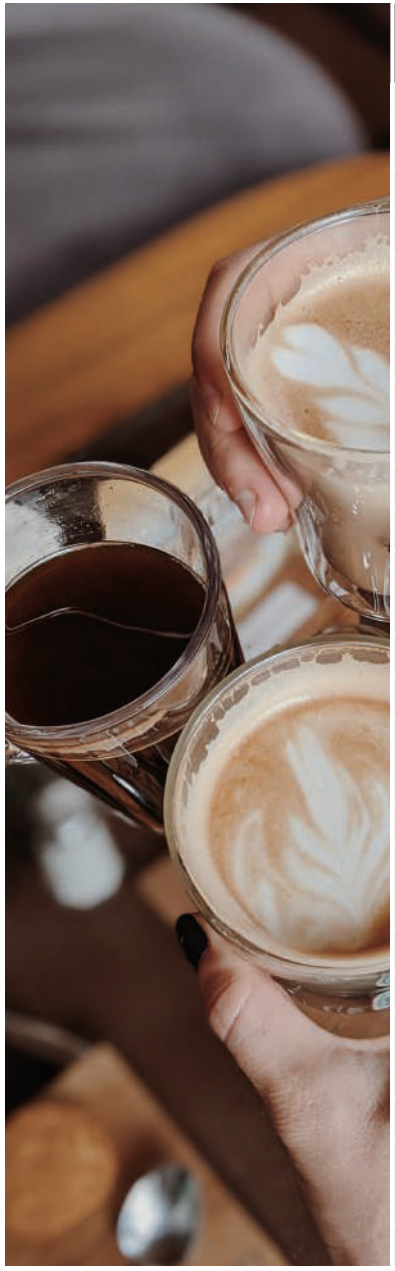

Configuration	JL35-ES4C-FM	JL35-ESFB4C-FM	JL35-ESLC4C-FM	JL35-ESBTC4C-FM	JL35-2ES3C-FM
Bean Hopper	1x1.8kg	1x1.8kg	1x1.8kg + 1x1.0kg	1x1.8kg + 1x1.0kg	2x1.8kg
Instant container	2x3.5L + 1x2.3L	2x3.5L + 1x2.3L	1 x 3.5L + 1 x 2.3L	1x3.5L + 1x2.3L	1x3.5L
Grinder	1xDitting EMH64	1xDitting EMH64	2xDitting EMH64	2xDitting EMH64	2xJetinno
Espresso brewer	1x14g/20g	1x14g/20g	2x14g/20g	1x14g/20g	1x14g/20g
Drip brewer	/	1x14g (tea)	/	1x14g (coffee)	/
Mixer	2	1	1	1	1
Hot water boiler	1x700mL,2700W	1x700mL,2700W	1x700mL,2700W	1x700mL,2700W	1x700mL,2700W
Steam boiler	1x700mL,3000W	1x700mL,3000W	1x700mL,3000W	1x700mL,3000W	1x700mL,3000W
Water Pump	Gear Pump	Gear Pump	Gear Pump	Gear Pump	Gear Pump
Spout height	80-180 mm	80-180 mm	80-180 mm	80-180 mm	80-180 mm
Cup Detector	√	√	√	√	√
Separate hot water outlet	√	√	√	√	√
Separate Hot Water	√	√	√	√	√
Waste bin	√	√	√	√	√
Drip tray	√	√	√	√	√
Slag falling	Optional				
Waste water drainage	Optional				
Cup Tray	Optional				
Cup Warmer	Optional				
Base cabinet	Optional				
Fresh Milk System	Cold&Hot Fresh milk and milk foam				
Fresh Milk Fridge	Optional, 4.5L				
Syrup Module	Optional，maximum 6 bottles				
Water supply	Tap water(default), barrelled water(optional)				
Internet connection	WiFi (default) 4G (optional)				
Payment system	Standard-wechat or alipay/Optional-scanner pay or other MDB payment devices				
OS	Android				
SaaS Platform	Optional				

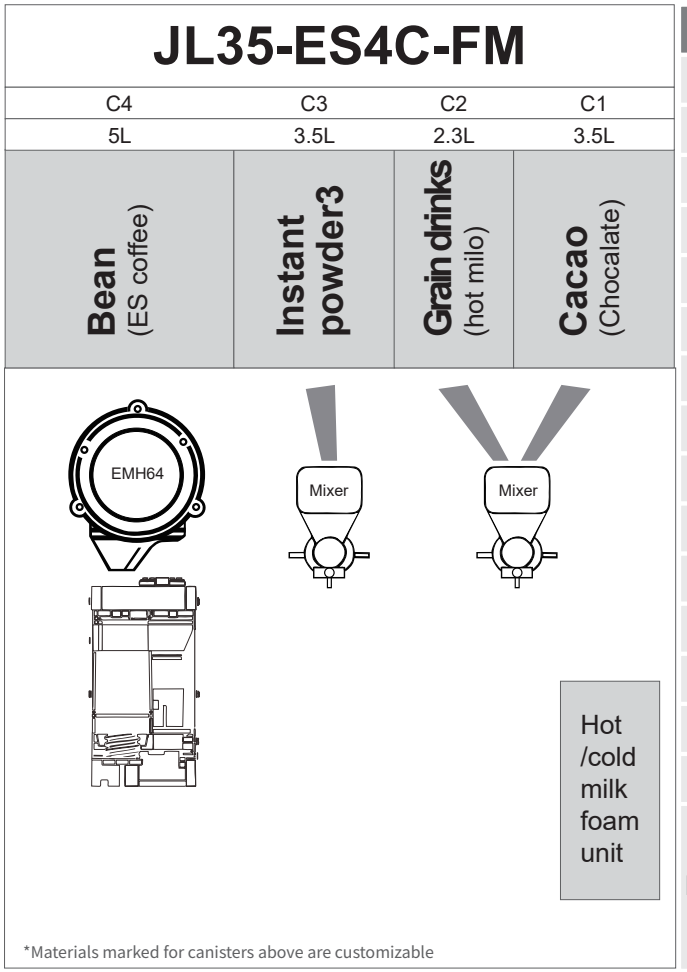

Configurations	Parameter specification
Displaying screen	14” touch screen
Bean hopper	1x1.8kg
Instant canister	2 x 3.5L + 1 x 2.3L
Grinder	1 x Ditting EMH64
Espresso brewer	1 x 14g/20g
Hot water boiler	1 x 700mL,2700W
Steam boiler	1 x 700mL,3000W
Waste bin	80 cakes, or external slag off (optional)
Drip tray	1L, or waste water drainage(optional)
Spout height	80-180mm
Water supply	Tap water(default), barrelled water(optional)
Power Supply	220-240V 50/60Hz
Rated Power	3100W
Dimensions (W*H*D)	365*730*535mm
Net weight	60kg

Main drinks：Espresso、American coffee、Cappuccino、Latte、Mocha、Milk、Cocoa

Daily Output:

250 Cups/Daily

Drinks Outpt(based on protocol DIN18873-2 hourly output)

	Single	Double		Single	Double
Espresso：	124	141	Cappuccino：	105	135
Americano：	100	124	Hot water：	240	

JL35-ESFB4C-FM

C4	C3	C2	C1
5L	3.5L	2.3L	3.5L
Bean (ES coffee)	**Fresh Tea**	**Grain drinks** (hot milo)	**Cacao** (Chocalate)

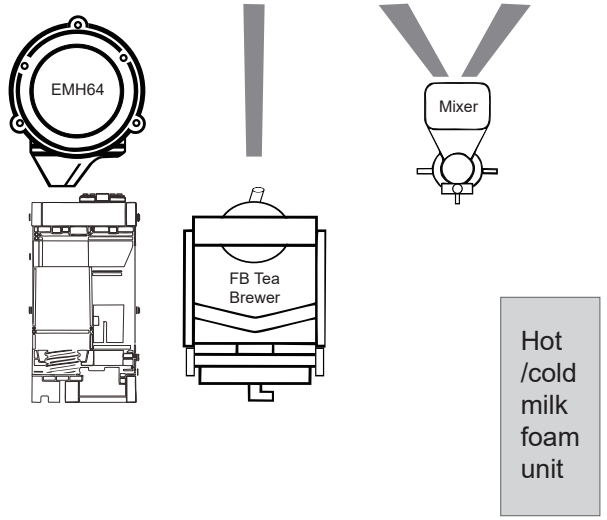

*Materials marked for canisters above are customizable

Configurations	Parameter specification
Displaying screen	14” touch screen
Bean hopper	1 x 1.8kg
Instant canister	2 x 3.5L + 1 x 2.3L
Grinder	1 x Ditting EMH64
Espresso brewer	1 x 14g/20g
Drip brewer	1x14g (tea)
Hot water boiler	1 x 700mL,2700W
Steam boiler	1 x 700mL,3000W
Waste bin	80 cakes, or external slag off (optional)
Drip tray	1L, or waste water drainage(optional)
Spout height	80-180mm
Water supply	Tap water(default), barrelled water(optional)
Power Supply	220-240V 50/60Hz
Rated Power	3100W
Dimensions (W*H*D)	365*730*535mm
Net weight	60kg
Main drinks：Espresso、American coffee、cappuccino、latte、mocha、milk、cocoa	

Daily Output:

250 Cups/Daily

Drinks Outpt(based on protocol DIN18873-2 hourly output)

	Single	Double		Single	Double
Espresso：	124	141	Cappuccino：	105	135
Americano：	100	124	Hot water：	240	

JL35-ESLC4C-FM

C4	C3	C2	C1
5L	2.8L	2.3L	3.5L
Bean (Long coffee)	**Bean** (ES coffee)	**Cacao** (Chocalate)	**Topping** (Milk)

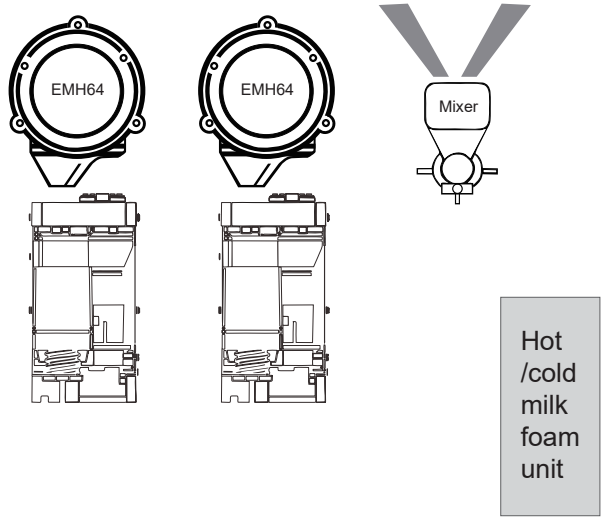

*Materials marked for canisters above are customizable

Configurations	Parameter specification
Displaying screen	14” touch screen
Bean hopper	1x 1.8kg + 1x 1.0kg
Instant canister	1 x 3.5L + 1 x 2.3L
Grinder	2 x Ditting EMH64
Espresso brewer	2 x 14g/20g
Drip brewer	/
Hot water boiler	1 x 700mL,2700W
Steam boiler	1 x 700mL,3000W
Waste bin	80 cakes, or external slag off (optional)
Drip tray	1L, or waste water drainage(optional)
Spout height	80-180mm
Water supply	Tap water(default), barrelled water(optional)
Power Supply	220-240V 50/60Hz
Rated Power	3100W
Dimensions (W*H*D)	365*730*535mm
Net weight	60kg
Main drinks：Espresso、American coffee、Long coffee、Cappuccino、Latte、Mocha、Milk、Cocoa	

Daily Output:

250 Cups/Daily

Drinks Outpt(based on protocol DIN18873-2 hourly output)

	Single	Double		Single	Double
Espresso：	124	141	Cappuccino：	105	135
Americano：	100	124	Hot water：	240	
Long coffee：	105	140			

JL35-ESBTC4C-FM

C4	C3	C2	C1
5L	2.8L	2.3L	3.5L
Bean Fresh coffee)	**Bean** (ES coffee)	**Cacao** (Chocalate)	**Topping** (Milk)

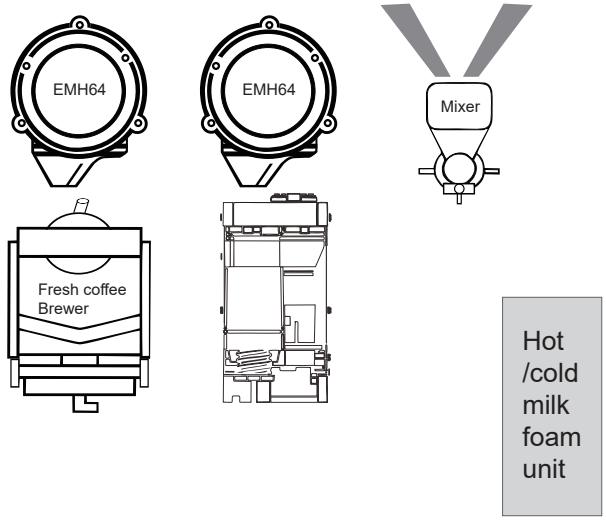

*Materials marked for canisters above are customizable

Configurations	Parameter specification
Displaying screen	14” touch screen
Bean hopper	1x 1.8kg + 1x 1.0kg
Instant canister	1 x 3.5L + 1 x 2.3L
Grinder	2 x Ditting EMH64
Espresso brewer	1 x 14g/20g
Drip brewer	1 x 14g (coffee)
Hot water boiler	1 x 700mL,2700W
Steam boiler	1 x 700mL,3000W
Waste bin	80 cakes, or external slag off (optional)
Drip tray	1L, or waste water drainage(optional)
Spout height	80-180mm
Water supply	Tap water(default), barrelled water(optional)
Power Supply	220-240V 50/60Hz
Rated Power	3100W
Dimensions (W*H*D)	365*730*535mm
Net weight	60kg
Main drink: Espressos Americano Cappuccino、Latte、Tea、Mocha^ Hot Chocolate、Filter Coffee、Milk	

Daily Output:

250 Cups/Daily

Drinks Outpt(based on protocol DIN18873-2 hourly output)

	Single	Double		Single	Double
Espresso:	124	141	Cappuccino:	105	135
Americano:	100	124	Hot water:	240	
Filter Coffee:	80	130			

JL35-2ES3C-FM

C3	C2	C1
5L	5L	3.5L
Bean (Long coffee)	**Bean** (ES coffee)	**Cacao** (Chocalate)

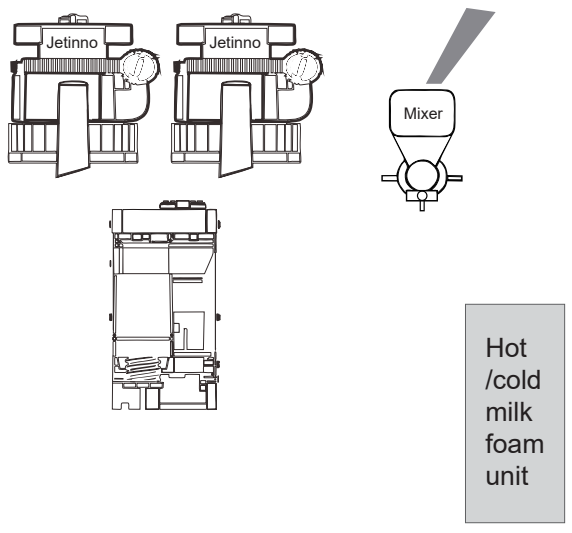

*Materials marked for canisters above are customizable

Configurations	Parameter specification
Displaying screen	14” touch screen
Bean hopper	2 x 1.8kg
Instant canister	1 x 3.5L
Grinder	2 x Jetinno
Espresso brewer	1 x 14g/20g
Hot water boiler	1 x 700mL,2700W
Steam boiler	1 x 700mL,3000W
Waste bin	80 cakes, or external slag off (optional)
Drip tray	1L, or waste water drainage(optional)
Spout height	80-180mm
Water supply	Tap water(default), barrelled water(optional)
Power Supply	220-240V 50/60Hz
Rated Power	3100W
Dimensions (W*H*D)	365*730*535mm
Net weight	60kg

Main drinks：Espresso、American coffee、Long coffee、Cappuccino、Latte、Mocha、Milk、Cocoa

Daily Output:

250 Cups/Daily

Drinks Outpt(based on protocol DIN18873-2 hourly output)

	Single	Double		Single	Double
Espresso：	100	180	Cappuccino：	105	150
Americano：	95	140	Hot water：	240	
Long coffee：	105	140			

Side view

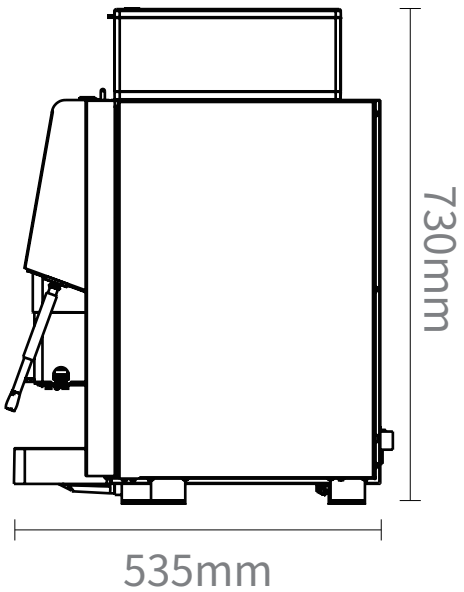

Front view

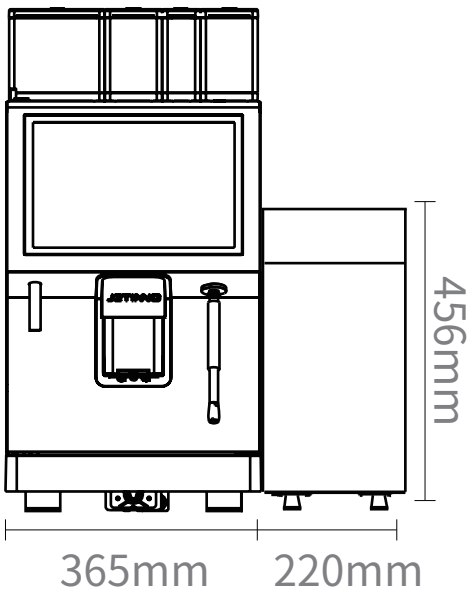

Top view

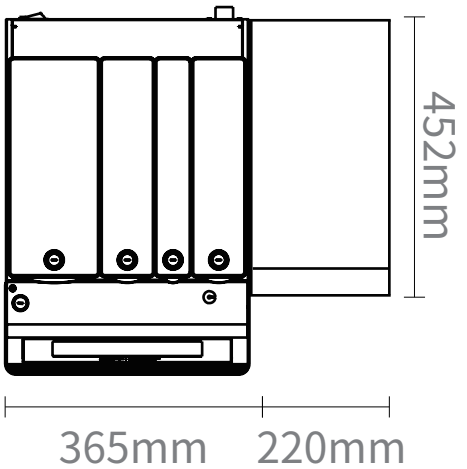

Package size: :630 (W) *430 (D) *780 (H) mm

Optional module	Optional or not
Waste Water Drainage	Optional
Slag off Waste Cakes	Optional
Fresh Milk Fridge	Optional
Syrup Tank	Optional
Human Induction	Optional
Jetinno Grinder	Optional
4G card	Optional

Payment module	Optional or not
Facial scan payment	Optional
Reverse QR Code payment	Optional
Paper currency validator	Optional
Coin validator	Optional
RFID payment	Optional
MDB Cashless	Optional

Jetinno grinder

Patented tech innovated by Jetinno.

Item	Parameter
Rated power	230V DC , 1.0A
Grinding blade	64mm
Grinder lifetime	500-1000kg
Grinder speed	1.4-1.7g/s
Grinder lifetime	150000
Adjustable coffee ground fineness, easy to use.	

Fresh Milk Fridge

To keep fresh milk cool, prevent sour milk.

Item	Parameter
EXternal Dimension	220 (w) *456 (h) *452 (d) mm
Inside Dimension	160 (w) *280 (h) *190 (d) mm
Control	Electronic
Inside Materials	ABS
Opening	Two sides
Temperature	0-4°C
Fridge Volume	8.5L
Milk Tank	4.5L
Cooler	green cooler：R600a

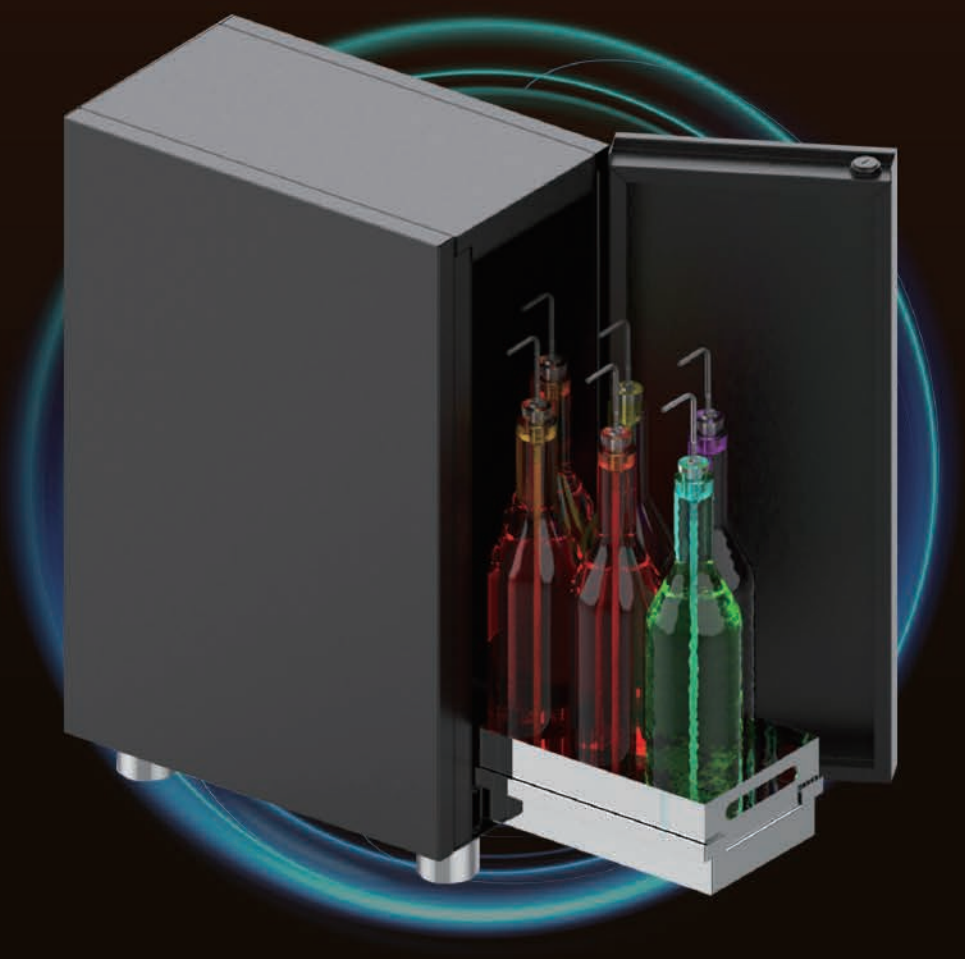

Syrup Tank

more flavors of beverages, standardization of sweetness.

Item	Parameter
Module dimensions (W*H*D)	260x600x426mm
Weight	20kg
Syrup Group	6 Bottles
Power supply	220-240V,50/60Hz
Rated power	<60W
Noise	W65dB(A)
Ambient Requirement	Temperature 5°C -35°C, Humidity 30-90%RH
Storing Temperature	0°C~+50°C
Storing Humidity	10%RH~90%RH
Food Contact Standards	ROHS/FDA/LFGB/GB4806

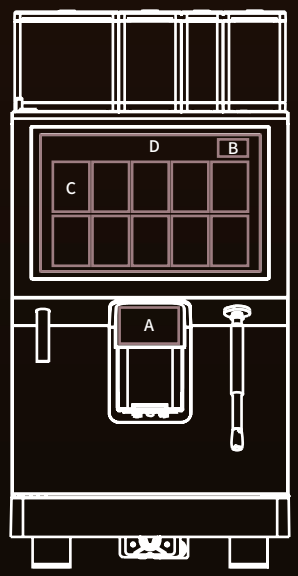

UI customization

Name	Position	Width	Height	Format
Brand LOGO	A	65mm	60mm	AI or cdr
UI LOGO	B	105PX	105PX	AI or cdr
UI drink picture	C	478PX	500PX	PNG
Video ads	D	1920PX	1080PX	PNG

Deep customization

Name	Item
Ports	Open underlying control serial port protocol, support customer self-developed APP.
	Open network interface(TCP/IP), support customer self-developed server.
	Open RESTful interface, support customer online store and data system.
OS	APP application layer customizable development (Linux, Android).

Product: Coffee machine tea brewer cleaner
Use: used for coffee machine tea brewer cleaning
Ratio: 2 pills with 5.67L water
Details: 4g/pill, 120 pills/bottle, 12 bottles/case

Product: coffee machine boiler cleaner
Use: used for coffee machine boiler cleaning
Ratio: 200g powder with 3.9L water
Details: 1kg/bottle, 6 bottles/case

Product: coffee machine cleaner
Use: used for coffee machine brewer cleaning
Details: 2g/pill, 100 pills/can, 12 cans/case

Product: cleaning brush
Use: used for coffee machine cleaning and maintenance
Details : general use

Product: tower
Use: used for coffee machine cleaning and maintenance
Details : general use

Security Certification

CB

CE

CQC

EAC

Food Contact Material

EU 1935/2004
European food test

Europe

LFGB
German

FDA
US

GB
GB4806
China

Europe EVA energy consumption level A

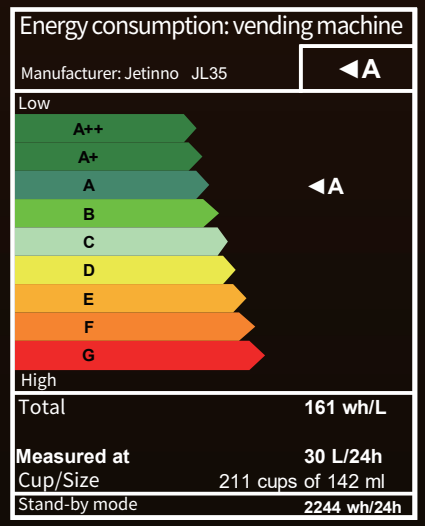

95% Recycled

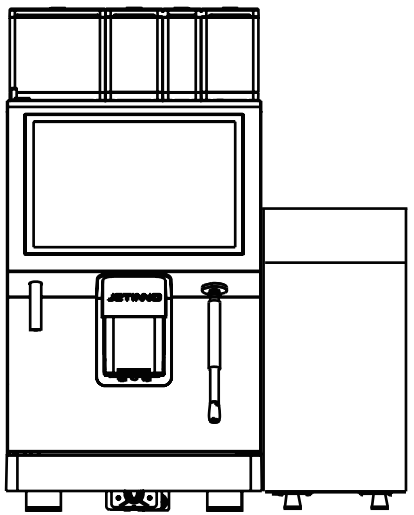

Guangzhou Jetinno Intelligent Equipment Co., Ltd
Address：4F, No. 2, Ruitai Road, Huangpu District, Guangzhou, China
Tel：400-017-9997
E-mail: inquiry@jetinno.com
Website：www.jetinno.com www.jetinnovending.com